# SAM3N-EK Development Board

# User Guide

11080C–ATARM–30-Mar-11

**Section 1**

Introduction ..... 1-1

1.1 SAM3N Evaluation Kit ..... 1-1

1.2 User Guide ..... 1-1

1.3 References and Applicable Documents ..... 1-1

**Section 2**

Kit Contents ..... 2-1

2.1 Deliverables ..... 2-1

2.2 Electrostatic Warning ..... 2-2

**Section 3**

Power Up ..... 3-1

3.1 Power up the Board ..... 3-1

3.2 DevStart ..... 3-1

3.3 Recovery Procedure ..... 3-1

3.4 Sample Code and Technical Support ..... 3-1

**Section 4**

Evaluation Kit Hardware ..... 4-1

4.1 Board Overview ..... 4-1

4.2 Features List ..... 4-2

4.3 Function Blocks ..... 4-2

4.3.1 Processor ..... 4-2

4.3.2 Memory ..... 4-2

4.3.3 Clock Circuitry ..... 4-3

4.3.4 Reset Circuitry ..... 4-3

4.3.5 Power Supply and Management ..... 4-4

4.3.6 UART ..... 4-4

4.3.7 Display Interface ..... 4-5

4.3.8 Backlight Control ..... 4-5

4.3.9 JTAG/ICE ..... 4-6

4.3.10 PWM Buzzer ..... 4-6

4.3.11 SD/MMC Card ..... 4-6

4.3.12 Touch Elements ..... 4-7

4.3.13 User Buttons ..... 4-7

4.3.14 LEDs ..... 4-8

4.3.15 ZigBee ..... 4-8

4.3.16 PIO Expansion ..... 4-8

4.4 Configuration ..... 4-9

4.4.1 PIO Usage ..... 4-9

4.4.2 Jumpers ..... 4-12
4.4.3 Test Points ..... 4-12
4.4.4 Assigned PIO Lines, Disconnection Possibility ..... 4-13

***Section 5***

QT600 ..... 5-1

5.1 Overview ..... 5-1
5.2 System Description ..... 5-2
5.3 Features ..... 5-2
5.4 Getting Started ..... 5-3
5.5 Hardware Description ..... 5-5
5.5.1 QT600 Interface Board ..... 5-5
5.5.2 TOUCH DATA Connectors ..... 5-7
5.5.3 Target Voltage VTG ..... 5-8
5.5.4 VTG LED ..... 5-8
5.5.5 TOUCH DATA LED ..... 5-8
5.5.6 STATUS LED ..... 5-9
5.5.7 Touch ATx Firmware ..... 5-9
5.6 Touch Debug ..... 5-9
5.7 Using QT600 and AVR QTouch Studio for Custom Applications ..... 5-9
5.8 Troubleshooting and Support ..... 5-10
5.8.1 Technical Support ..... 5-10
5.8.2 Force Firmware Upgrade ..... 5-10

***Section 6***

Schematics ..... 6-1

6.1 Schematics ..... 6-1

***Section 7***

Troubleshooting ..... 7-1

7.1 Self-Test ..... 7-1
7.2 Board Recovery ..... 7-1

***Section 8***

Revision History ..... 8-1

8.1 Revision History ..... 8-1

# Section 1

# Introduction

## 1.1 SAM3N Evaluation Kit

The SAM3N Evaluation Kit (SAM3N-EK) allows the evaluation of the SAM3N series devices. It has enough features to demonstrate most of the product's capabilities to the users. The SAM3N-EK also features extension connectors to allow the users to add new interfaces in case they are not on-board.

## 1.2 User Guide

This guide focuses on the SAM3N-EK board as an evaluation platform. It is made up of 6 sections:

- Section 1 includes references, applicable documents, acronyms and abbreviations.
- Section 2 summarizes the kit contents.
- Section 3 provides instructions to power up the SAM3N-EK and describes how to use it.
- Section 4 describes the SAM3N-EK board design in more detail.
- Section 5 provides schematics.
- Section 6 describes the troubleshooting.

## 1.3 References and Applicable Documents

***Table 1-1.*** References and Applicable Documents

| Title | Comment |
|---|---|
| SAM3N Datasheet | http://atmel.com/dyn/products/devices.asp?family_id=605#2245 |

# Section 2

# Kit Contents

## 2.1 Deliverables

The Atmel® SAM3N Evaluation Kit contains the following items:

- a SAM3N-EK board
- a universal input AC/DC power supply with US, Europe and UK plug adapters
- one serial RS232 cable
- a welcome letter

***Figure 2-1.*** Unpacked SAM3N-EK

Unpack and inspect the kit carefully. Contact your local Atmel distributor, should you have issues concerning the contents of the kit.

## 2.2 Electrostatic Warning

The SAM3N-EK board must not be subjected to high electrostatic potentials. A grounding strap or similar protective device should be worn when handling the board. Avoid touching the components or any other metallic element of the board.

# Section 3

# Power Up

## 3.1 Power up the Board

Unpack the board taking care to avoid electrostatic discharge. Unpack the power supply, select the right power plug adapter corresponding to that of your country, and insert it in the power supply.

Connect the power supply DC connector to the board and plug the power supply to an AC power plug. The board LCD should light up and run a Touch demo (shows a screen animation that matches the Touch devices operated on the PCB).

## 3.2 DevStart

The CDROM provided in the kit contains what we call a "DevStart" a.k.a. "Development Start". This bundle guides you through the first steps of building and running a software application on the SAM3N-EK.

If the CD does not auto-play on your PC, just open it through the explorer and click the file welcome.html to get started.

The SAM3N-EK DevStart guides you through the installation processes of IAR™ EWARM, Keil MDK and GNU toolkits. Then, it gives you step-by-step instructions on how to rebuild a single example project and how to program it into the SAM3N-EK. Optionally, if you have a SAM-ICE™, instructions are also given about how to debug the code.

## 3.3 Recovery Procedure

The DevStart ends by giving step-by-step instructions on how to recover the SAM3N-EK to the state as it was when shipped by Atmel.

SAM3N-EK Test Software, Chapter 3.1 "Flash Recovery" gives instructions if you deleted the contents of the embedded Flash or the DataFlash® and want to recover from this situation.

## 3.4 Sample Code and Technical Support

After boot up, you can run some sample code or your own application on the development kit. You can download sample code and get technical support from Atmel website (http://support.atmel.no/bin/customer).

# Section 4

# Evaluation Kit Hardware

## 4.1 Board Overview

This section introduces the Atmel SAM3N Evaluation Kit design. It introduces system-level concepts, such as power distribution, memory, and interface assignments.

The SAM3N-EK board is based on the integration of an ARM® Cortex®-M3 processor with on-board Flash and a set of popular peripherals. It is designed to provide a high performance processor evaluation solution with high flexibility for various kinds of applications.

***Figure 4-1.*** SAM3N-EK Block Diagram

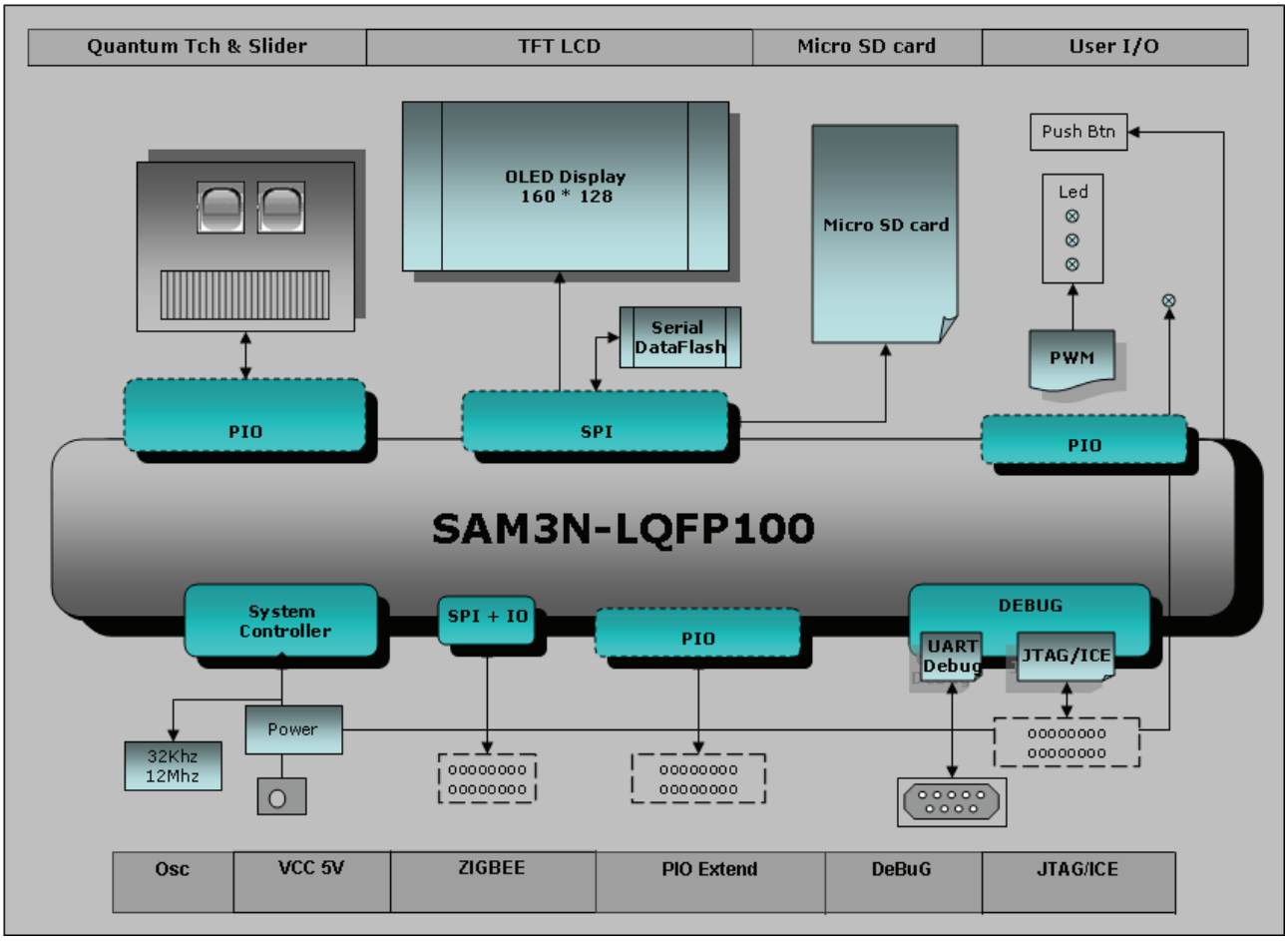

## 4.2 Features List

Here is the list of the main board components and interfaces:

- SAM3N4C QFP chip with optional socket footprint
- 12 MHz crystal
- 32.768 KHz crystal
- 32-Megabit Serial DataFlash
- 2.0 inch TFT color LCD display with backlight
- UART port with level shifter IC
- Micro SD interface
- Reset buttons: NRST
- User buttons: Left and Right
- QTouch® buttons: Left, Right, and Slider
- JTAG port
- On-board power regulation
- Two user LEDs
- Power LED
- ZigBee® connector
- 2x32 bit PIO connection interfaces (PIOA, PIOC) and 1x15 bit PIO connection interface (PIOB)

## 4.3 Function Blocks

### 4.3.1 Processor

The SAM3N-EK is equipped with a SAM3N4C device in LQFP100 package.

### 4.3.2 Memory

The SAM3N4 chip embeds:

- 256 Kbytes of embedded Flash
- 24 Kbytes of embedded SRAM with dual bank
- 16 Kbytes of ROM with embedded BootLoader routines (UART) and In-Application Programming functions (IAP) routines.

The SAM3N-EK features an external DataFlash through SPI bus

***Figure 4-2.*** DataFlash

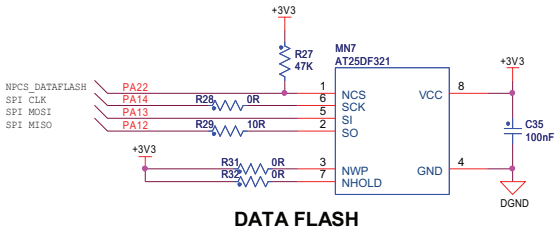


NPCS3 chip select signal is used for DataFlash chip selection.

### 4.3.3 Clock Circuitry

The clock generator of a SAM3N microcontroller is made up of:

- A Low Power 32,768 Hz Slow Clock Oscillator with bypass mode
- A Low Power RC Oscillator
- A 3 to 20 MHz Crystal Oscillator, which can be bypassed
- A factory programmed fast internal RC Oscillator. 3 output frequencies can be selected: 4 (default value), 8 or 12 MHz.
- A 60 to 130 MHz programmable PLL (input from 3.5 to 20 MHz), capable to provide the clock MCK to the processor and to the peripherals.

The SAM3N-EK board is equipped with one 12 MHz crystal, and one 32.768 Hz crystal. An optional 12 MHz Piezoelectric Ceramic Resonator can be mounted in place of the 12 MHz crystal (for low cost clocking option evaluation).

***Figure 4-3.*** SAM3N MCU

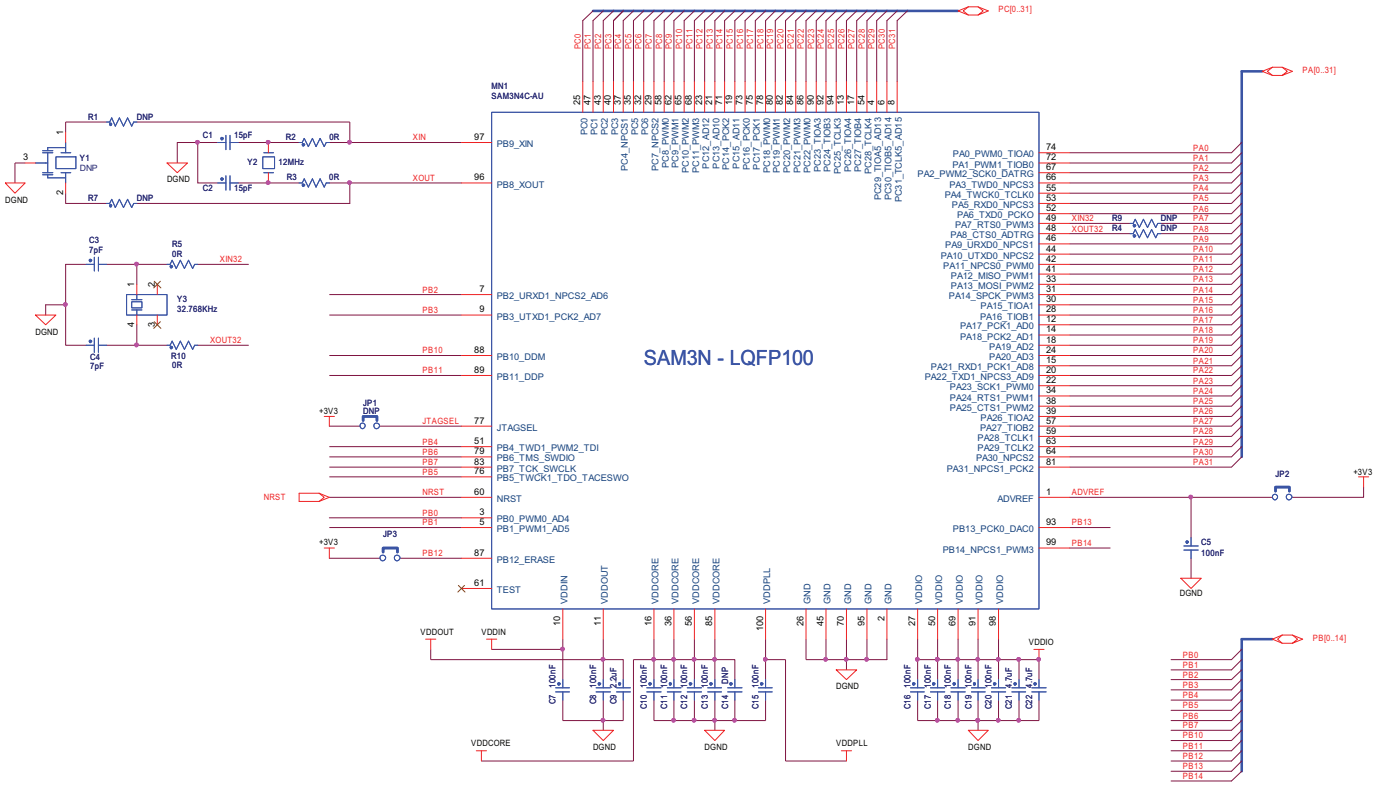


### 4.3.4 Reset Circuitry

The on-board NRST button BP1 provides the SAM3N4C with external reset control.

Two User buttons BP2 and BP3, can be used to wake up the chip from low power modes.

The NRST pin is bidirectional. It is handled by the on-chip reset controller. It can be driven low to provide a reset signal out to the external components. Conversely, it can be asserted low from the outside to reset the microcontroller, its core and peripherals, with exception of the backup region (RTC, RTT and

Supply Controller). The NRST pin integrates a permanent pull-up resistor of about 100 kOhm to VDDIO. On the SAM3N-EK board, the NRST signal is connected to the JTAG port.

### 4.3.5 Power Supply and Management

The SAM3N-EK board is supplied with an external 5V DC block through the J1 socket. It is protected by a PolyZen diode MN3. The PolyZen protects the board in the case of an incorrect power supply connection.

The LDO regulator MN4 is used for the 3.3V main supply. It powers all the 3.3V components on the board.

***Figure 4-4.*** Power Block

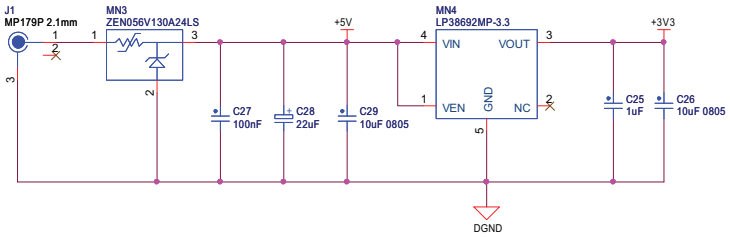


The SAM3N4/2/1 product series has different types of power supply pins:

- VDDIN pin: Power for the internal voltage regulator, ADC, DAC, and analog comparator power supplies. This voltage ranges from 1.8V to 3.6V.
- VDDIO pin: Powers the Peripheral I/O lines, Backup part, 32 kHz crystal oscillator and oscillator pads. This voltage ranges from 1.62V to 3.6V.
- VDDOUT pin: Output of the internal voltage regulator.
- VDDCORE pin: Powers the core, including the processor, the embedded memories and the peripherals. This voltage ranges from 1.62V to 1.95V.
- VDDPLL pin: Powers the PLL, the Fast RC and the 3 to 20 MHz oscillators. This voltage ranges from 1.62V to 1.95V.

### 4.3.6 UART

The Universal Asynchronous Receiver Transmitter features a two-pin UART that can be used for communication and trace purposes. It offers an ideal channel for in-situ programming solutions. This UART is associated with two PDC channels to reduce the processor time on packet handling.

The two-pin UART (TXD and RXD only) is buffered through an RS232 Transceiver MN8 and brought to the DB9 male connector J4.

*Figure 4-5.* UART

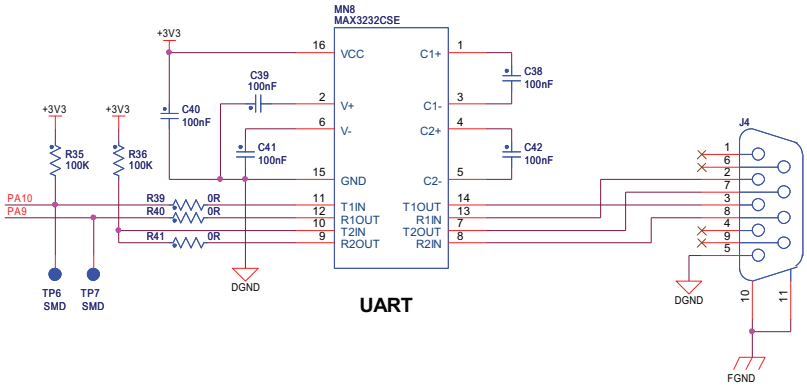


## 4.3.7 Display Interface

The SAM3N-EK carries a TFT Transmissive LCD module with touch panel, TM020GDZ18. Its integrated driver IC is ILI9225B. The LCD display area is 2.0 inches diagonally measured, with a native resolution of 176x220 pixels.

The LCD module gets reset from GPIO PA29. The LCD chip select signal is connected to NPCS2. The SAM3N communicates with the LCD through the SPI bus.

*Figure 4-6.* LCD

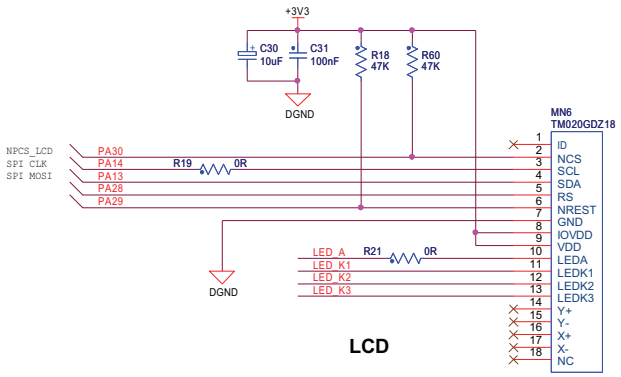


## 4.3.8 Backlight Control

The LCD backlight is made of four integrated white chip-LEDs arranged in parallel. These are driven by an AAT3193 charge pump, MN5. The AAT3193 is controlled by the SAM3N through a single PIO line interface (PC13); the 0 Ohm resistor R17 is mounted in series on this line, which permits to use it for other custom purposes. In that case, the pull-up resistor R64 maintains the charge pump permanently enabled by default.

On the anode drive line, a 0 Ohm resistor R21 is implemented in series for an optional current limitation.

***Figure 4-7.*** Backlight

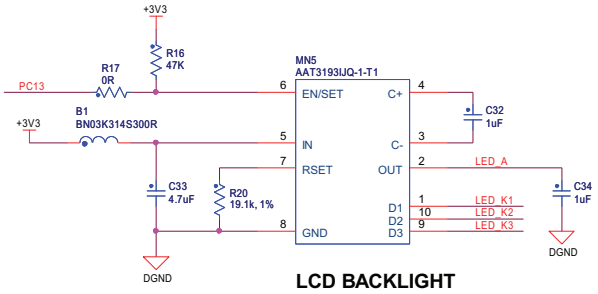


## 4.3.9 JTAG/ICE

A standard 20-pin JTAG/ICE connector is implemented on the SAM3N-EK for the connection of a compatible ARM JTAG emulator interface, such as the SAM-ICE from Segger.

***Notes:*** ***1.*** The NRST signal is connected to BP1 system button. The 0 ohm resistor R30 may be removed in order to isolate the JTAG port from this system reset signal.

***2.*** The TDO pin is in input mode with the pull-up resistor disabled when the Cortex M3 is not in debug mode. To avoid current consumption on VDDIO and/or VDDCORE due to floating input, the internal pull-up resistor corresponding to this PIO line must be enabled.

***Figure 4-8.*** JTAG Connector

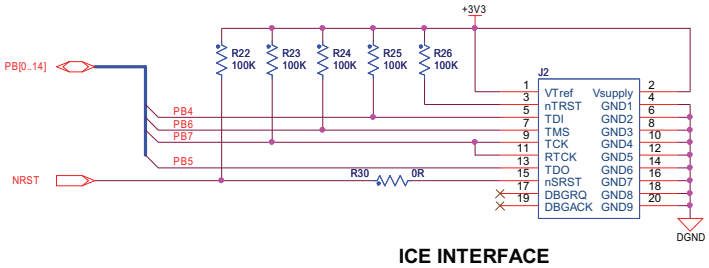


## 4.3.10 PWM Buzzer

A small, magnetic audio transducer connects through a MOSFET to PWM, allowing a range of options for generating simple and complex tones.

***Figure 4-9.*** PWM Buzzer

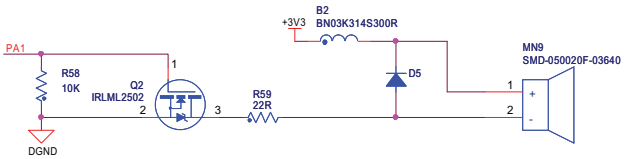


## 4.3.11 SD/MMC Card

The SAM3N has a high-speed 4-bit multimedia MMC interface, which is connected to a 4-bit SD/MMC micro card slot featuring a card detection switch.

*Figure 4-10.* SD Card

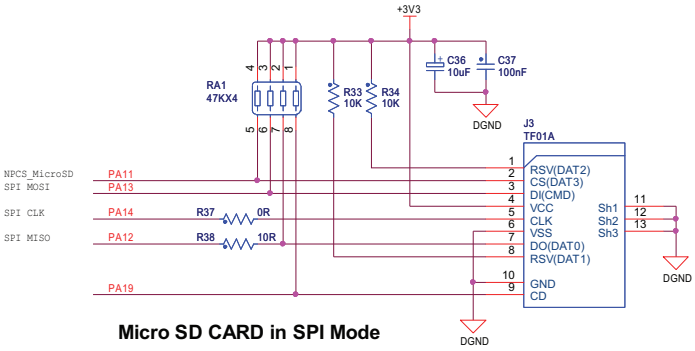


## 4.3.12 Touch Elements

QTouch keys consist of a series of sensors formed by the association of a copper area and the capacitive effect of human fingers approaching it.

*Figure 4-11.* QTouch Elements

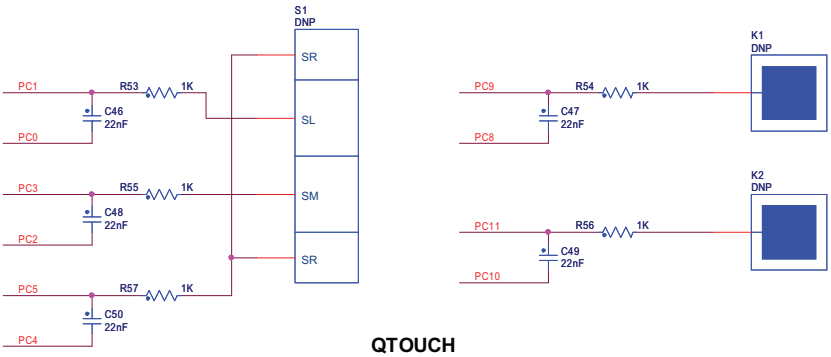


- Keys

The SAM3N-EK implements two individual capacitive touch keys (RIGHT, LEFT) using two pairs of PIOs.

- Slider

A group of channels forms a Slider. A Slider is composed of three channels for a QTouch acquisition method using three pairs of PIOs. Such a sensor is used to detect a linear finger displacement on a sensitive area. A typical slider implementation is volume control.

## 4.3.13 User Buttons

There are two mechanical user buttons on the SAM3N-EK, which are connected to PIO lines and defined to be "left" and "right" buttons by default.

In addition, a mechanical button controls the system reset, signal NRST.

***Figure 4-12.*** User Buttons

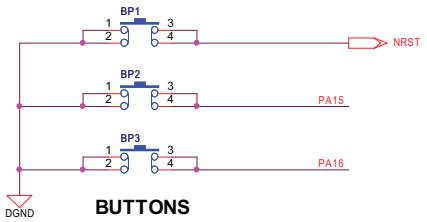


### 4.3.14 LEDs

There are four LEDs on the SAM3N-EK board:

- A blue LED (D1), a green LED (D2), and an amber LED (D3) which are user-defined and controlled by the GPIO.
- A red LED (D4), which is a power LED indicating that the 3.3V power rail is active. It is also controlled by the GPIO and can be treated as a user LED as well. The only difference with the three others is that it is controlled through a MOS transistor. By default, the PIO line is disabled; a pull-up resistor controls the MOS to light the LED when the power is ON.

***Figure 4-13.*** LEDs

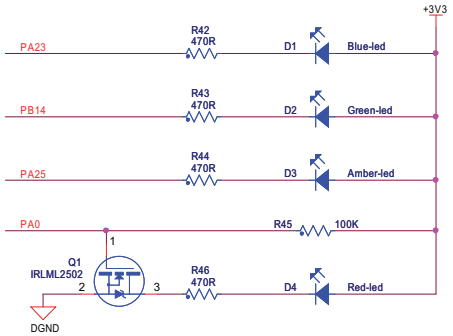


### 4.3.15 ZigBee

SAM3N-EK has a 10-pin male connector for the RZ600 ZigBEE module.

***Note:*** 0 Ohm resistors have been implemented in series with the PIO lines that are used elsewhere in the design, thereby enabling their individual disconnection, should a conflict occur in your application.

***Figure 4-14.*** ZigBee

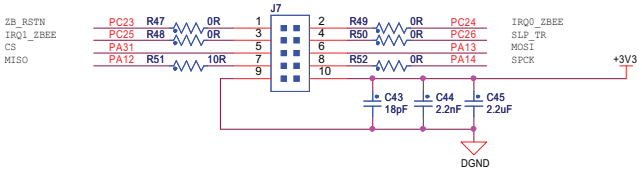


### 4.3.16 PIO Expansion

The SAM3N product features three PIO controllers, PIOA, PIOB and PIOC, which are multiplexed with the I/O lines of the embedded peripherals. Each PIO Controller controls up to 32 lines (15 for PIOB).

Expansion ports J5, J6 provide PIO lines access for customer defined usage.

***Note:*** All PIO lines are available on these expansion connectors, except those that are used for the QTouch elements.

***Figure 4-15.*** PIO Expansion

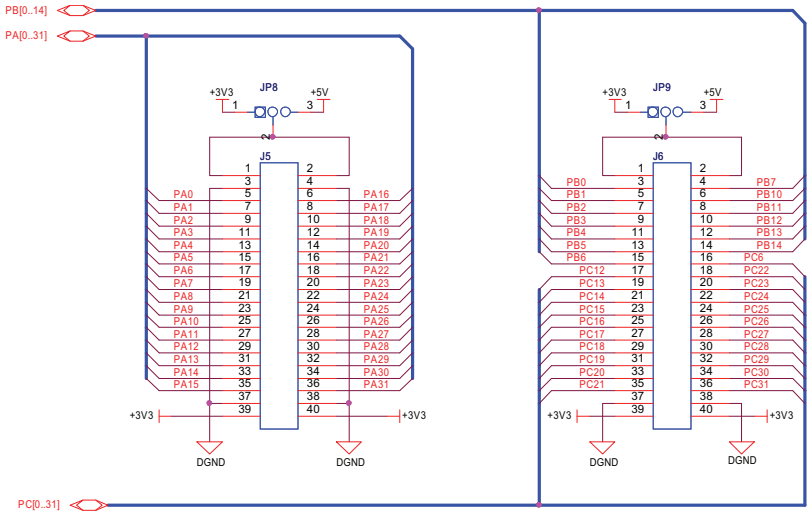


## 4.4 Configuration

This section describes the PIO usage, the jumpers, the test points and the solder drops of a SAM3N-EK board.

### 4.4.1 PIO Usage

***Table 4-1.*** PIO Port A Assignment

| I/O Line | Peripheral A | Peripheral B | Peripheral C | Extra Function | EK Usage | Device |
|---|---|---|---|---|---|---|
| PA0 | PWM0 | TIOA0 | | WKUP00 | POWER LED | Led Red |
| PA1 | PWM1 | TIOB0 | | WKUP01 | CMD_SOUND | BUZZER |
| PA2 | PWM2 | SCK0 | DATRG | WKUP02 | | |
| PA3 | TWD0 | NPCS3 | | WKUP03 | | |
| PA4 | TWCK0 | TCLK0 | | | | |
| PA5 | RXD0 | NPCS3 | | WKUP04 | | |
| PA6 | TXD0 | PCK0 | | | | |
| PA7 | RTS0 | PWM3 | | | XIN32 | 32K Crystal |
| PA8 | CTS0 | ADTRG | | WKUP05 | XOUT32 | 32K Crystal |
| PA9 | URXD0 | NPCS1 | | WKUP06 | RX_UART0 | UART |
| PA10 | UTXD0 | NPCS2 | | | TX_UART0 | UART |
| PA11 | NPCS0 | PWM0 | | WKUP07 | SPI_NPCS0# | MicroSD |

***Table 4-1.*** PIO Port A Assignment (Continued)

| I/O Line | Peripheral A | Peripheral B | Peripheral C | Extra Function | EK Usage | Device |
|---|---|---|---|---|---|---|
| PA12 | MISO | PWM1 | | | SPI_MISO | LCD<br>MicroSD<br>DataFlash<br>Zigbee |
| PA13 | MOSI | PWM2 | | | SPI_MOSI | LCD<br>MicroSD<br>DataFlash<br>Zigbee |
| PA14 | SPCK | PWM3 | | WKUP08 | SPI_SPCK | LCD<br>MicroSD<br>DataFlash<br>Zigbee |
| PA15 | | TIOA1 | | WKUP14 | PB_LEFT# | Push Button Left |
| PA16 | | TIOB1 | | WKUP15 | PB_RIGHT# | Push Button Right |
| PA17 | | PCK1 | | AD0 | | |
| PA18 | | PCK2 | | AD1 | | |
| PA19 | | | | AD2/ WKUP09 | MicroSD_CD | MicroSD |
| PA20 | | | | AD3/ WKUP10 | | |
| PA21 | RXD1 | PCK1 | | AD8 | | |
| PA22 | TXD1 | NPCS3 | | AD9 | SPI_NPCS3# | DataFlash |
| PA23 | SCK1 | PWM0 | | | USR_LED1# | Led Blue |
| PA24 | RTS1 | PWM1 | | | | |
| PA25 | CTS1 | PWM2 | | | USR_LED3# | Led Amber |
| PA26 | | TIOA2 | | | | |
| PA27 | | TIOB2 | | | | |
| PA28 | | TCLK1 | | | RS_LCD | LCD |
| PA29 | | TCLK2 | | | RST_LCD | LCD |
| PA30 | | NPCS2 | | WKUP11 | SPI_NPCS2# | LCD |
| PA31 | NPCS1 | PCK2 | | | SPI_NPCS1# | ZigBee |

***Table 4-2.*** PIO Port B Assignment

| I/O Line | Peripheral A | Peripheral B | Peripheral C | Extra Function | EK Usage | Device |
|---|---|---|---|---|---|---|
| PB0 | PWM0 | | | AD4 | | |
| PB1 | PWM1 | | | AD5 | | |
| PB2 | URXD1 | NPCS2 | | AD6/ WKUP12 | | |
| PB3 | UTXD1 | PCK2 | | AD7 | | |
| PB4 | TWD1 | PWM2 | | | TDI | JTAG |
| PB5 | TWCK1 | | | WKUP13 | TDO/<br>TRACESWO | JTAG |

*Table 4-2.* PIO Port B Assignment (Continued)

| I/O Line | Peripheral A | Peripheral B | Peripheral C | Extra Function | EK Usage | Device |
|---|---|---|---|---|---|---|
| PB6 | | | | | TMS/SWDIO | JTAG |
| PB7 | | | | | TCK/SWCLK | JTAG |
| PB8 | | | | | XOUT_12M | 12M Crystal |
| PB9 | | | | | XIN_12M | 12M Crystal |
| PB10 | | | | | | |
| PB11 | | | | | | |
| PB12 | | | | | ERASE | JUMPER |
| PB13 | | PCK0 | | DAC0 | | |
| PB14 | NPCS1 | PWM3 | | | USR_LED2# | Led Green |

*Table 4-3.* PIO Port C Assignment

| I/O Line | Peripheral A | Peripheral B | Peripheral C | Extra Function | EK Usage | Device |
|---|---|---|---|---|---|---|
| PC0 | | | | | QT_SL_SNS | QTOUCH_SLIDER |
| PC1 | | | | | QT_SL_SNSK | QTOUCH_SLIDER |
| PC2 | | | | | QT_SM_SNS | QTOUCH_SLIDER |
| PC3 | | | | | QT_SM_SNSK | QTOUCH_SLIDER |
| PC4 | | NPCS1 | | | QT_SR_SNS | QTOUCH_SLIDER |
| PC5 | | | | | QT_SR_SNSK | QTOUCH_SLIDER |
| PC6 | | | | | | |
| PC7 | | NPCS2 | | | | |
| PC8 | | PWM0 | | | QT1_ SNS | QTOUCH_KEY_Left |
| PC9 | | PWM1 | | | QT1_ SNSK | QTOUCH_KEY_Left |
| PC10 | | PWM2 | | | QT2_ SNS | QTOUCH_KEY_Right |
| PC11 | | PWM3 | | | QT2_ SNSK | QTOUCH_KEY_Right |
| PC12 | | | | AD12 | | |
| PC13 | | | | AD10 | EN_LCD | LCD |
| PC14 | | PCK2 | | | | |
| PC15 | | | | AD11 | | |
| PC16 | | PCK0 | | | | |
| PC17 | | PCK1 | | | | |
| PC18 | | PWM0 | | | | |
| PC19 | | PWM1 | | | | |
| PC20 | | PWM2 | | | | |
| PC21 | | PWM3 | | | | |
| PC22 | | PWM0 | | AD16 | | |
| PC23 | | TIOA3 | | | ZB_RSTN | ZigBee |

***Table 4-3.*** PIO Port C Assignment (Continued)

| I/O Line | Peripheral A | Peripheral B | Peripheral C | Extra Function | EK Usage | Device |
|---|---|---|---|---|---|---|
| PC24 | | TIOB3 | | | ZB_IRQ0 | ZigBee |
| PC25 | | TCLK3 | | | ZB_IRQ1 | ZigBee |
| PC26 | | TIOA4 | | | ZB_SLPTR | ZigBee |
| PC27 | | TIOB4 | | | | |
| PC28 | | TCLK4 | | | | |
| PC29 | | TIOA5 | | AD13 | | |
| PC30 | | TIOB5 | | AD14 | | |
| PC31 | | TCLK5 | | AD15 | | |

### 4.4.2 Jumpers

The SAM3N-EK board jumpers are used for many purposes such as internal Flash Memory reinitialization, power current measurement and other configurations.

***Table 4-4.*** Jumpers

| Designation | Label | Default Setting | Feature |
|---|---|---|---|
| JP1 | JTAGSEL | OPEN | Close it to reinitialize the Flash content and some of its NVM bits.<br>This jumper must be closed for more than 220 ms at power-up to perform the reinitialization. |
| JP2 | ADVREF | CLOSE | Analog reference voltage selection, access for external reference voltage |
| JP3 | PB12 | OPEN | ERASE, Close to reinitialize the Flash contents and some of its NVM bits |
| JP4 | VDDIO | CLOSE | Access for current measurement on VDDIO |
| JP5 | VDDIN | CLOSE | Access for current measurement on VDDIN |
| JP6 | VDDPLL | CLOSE | Access for current measurement on VDDPLL |
| JP7 | VDDCORE | CLOSE | Access for current measurement on VDDCORE |
| JP8 | +3V3 | 1-2 | DC voltage selection between 3.3V and 5V on PIO expansion ports, default for 3.3V |
| JP9 | +3V3 | 1-2 | DC voltage selection between 3.3V and 5V on PIO expansion ports, default for 3.3V |

### 4.4.3 Test Points

Some test points have been placed on the SAM3N-EK board for the verification of important signals.

***Table 4-5.*** Test Points

| Designation | Part | Description |
|---|---|---|
| TP1 | Ring Hook | +5V |
| TP2 | Ring Hook | +3V3 |
| TP3 | Ring Hook | GND |
| TP4 | Ring Hook | GND |

*Table 4-5.* Test Points (Continued)

| Designation | Part | Description |
|---|---|---|
| TP5 | Ring Hook | GND |
| TP6 | Pad | UTXD0 |
| TP7 | Pad | URXD0 |

### 4.4.4 Assigned PIO Lines, Disconnection Possibility

As pointed out in previous interface descriptions, 0-Ohm resistors have been inserted on the PIO lines receiver path of the SAM3N-EK. Some PIO lines are connected to an external driver on the board. The 0-Ohm resistors allow disconnecting each of these for custom usage (through PIO expansion connectors, for example). This feature gives the user an added level of versatility for prototyping a system of his own. See the table below.

*Table 4-6.* Disconnection Possibility

| Designation | Default Assignment | PIO |
|---|---|---|
| R2 | XIN | PB9 |
| R3 | XOUT | PB8 |
| R9, R5 | XIN32 | PA7 |
| R4, R10 | XOUT32 | PA8 |
| R17 | EN_LCD | PC13 |
| R39 | URXD0 | PA9 |
| R40 | UTXD0 | PA10 |
| R47 | ZB_RSTN | PC23 |
| R48 | IRQ1_ZBEE | PC25 |
| R49 | IRQ0_ZBEE | PC24 |
| R50 | SLP_TR | PC26 |

# Section 5

# QT600

## 5.1 Overview

The QT600 is an integrated board added in the kit that allows you to develop and debug any application using the Atmel QTouch Library™. QT600 has been designed to give developers a quick and easy way to start developing touch solutions on Atmel ATx Microcontrollers.

QT600 is fully supported by QTouch Library and AVR Studio®, and together these tools form the Atmel QTouch Suite™.

***Figure 5-1.*** SAM3N-EK and QT600 Connection

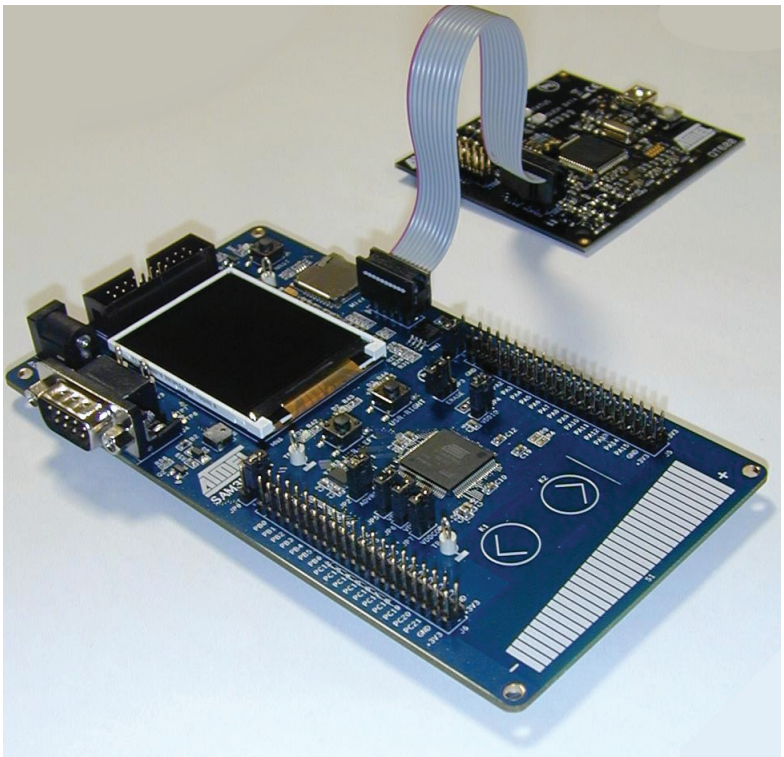

## 5.2 System Description

The development system is based on two boards connected together:

- QT600 Interface Board
- SAM3N-EK Board with Touch Sensor

***Figure 5-2.*** QT600 System Block Diagram

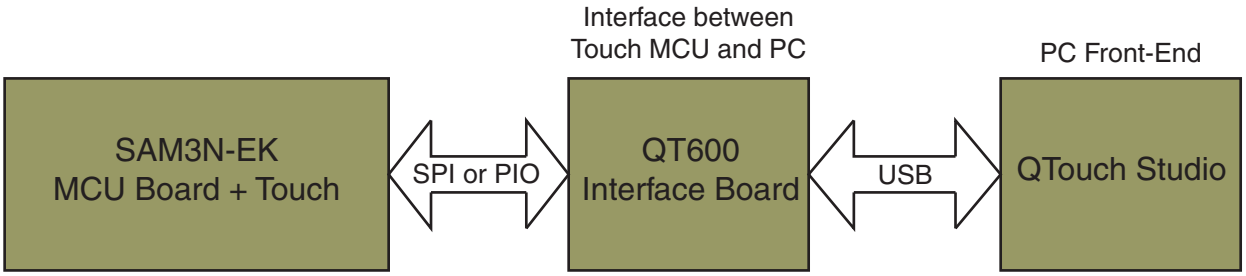


The QT600 Interface board is used to stream live touch data from the SAM3N-EK board. QTouch Studio™ is used as the PC front-end, for visualization of the touch data.

## 5.3 Features

- Live streaming of touch data to QTouch Studio
- USB Interface to PC for programming and streamed QTouch Debug data
- Powered from USB bus

## 5.4 Getting Started

To use the QT600 interface, it is necessary to have QTouch Studio™ 3.4.0 or later installed. Download the latest version from www.atmel.com.

Download and install the “Atmel_QTouch_Libraries_4.3_SAM3N_Patch.exe” and follow the installation steps as detailed below:

1. Start the installation process

***Figure 5-3.*** Installation Step 1

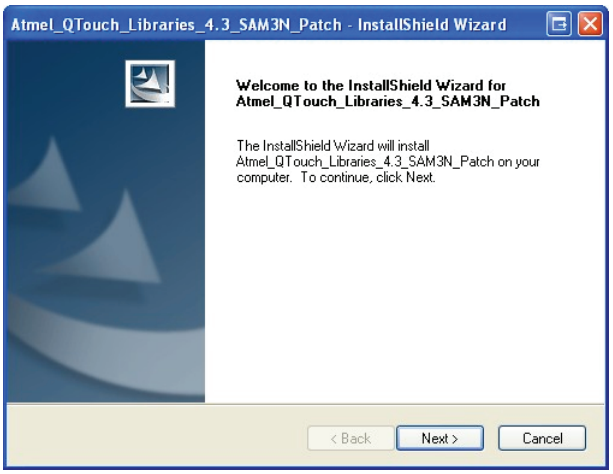


2. Accept the terms of the licence agreement
3. Choose the destination location of the folder
4. Update the QT600 firmware
5. Install the program
6. When the installation is complete, click the “Finish” button

***Figure 5-4.*** Installation Step 6

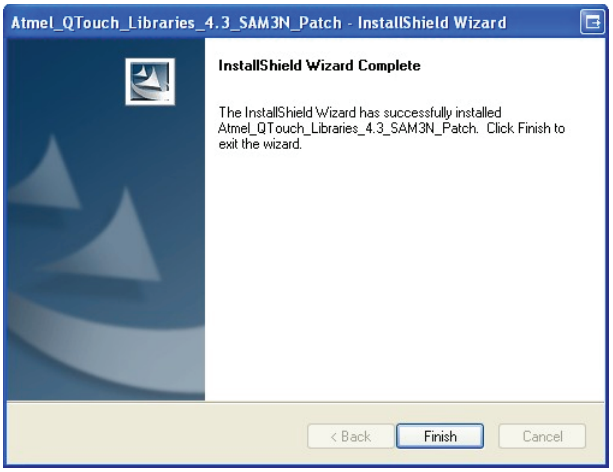

The SAM3N-EK boards must be programmed with the QTouch application code. For ARM products, the examples can be retrieved from the QTouch Library (installation process described on page 5-3).

The example projects must be compiled for the application to work. Refer to the *main.c* file in each project for details.

- For the SPI interface, the project files are located in:

  C:\ProgramFiles\Atmel\Atmel_QTouch_Libraries_4.3\Generic_QTouch_Libraries\AT91SAM\SAM3\QTouch\example_projects\sam3n4_iar_qt_example_spi

- For the PIO interface, the project files are located in:

  C:\ProgramFiles\Atmel\Atmel_QTouch_Libraries_4.3\Generic_QTouch_Libraries\AT91SAM\SAM3\QTouch\example_projects\sam3n4_iar_qt_example

The Touch Data LED on the QT600 indicates the mode:

- Touch Data LED green: Touch Debug Mode (default mode after power-up).
- Touch Data LED off: Programmer Mode

Make sure that the Touch Data LED is off before attempting to connect to the QT600 from the QTouch Studio programming dialog. Use AVR Studio 4.18 or later.

1. Connect the 10 wire flat-cable between the Touch Data header on the QT600 and the selected SAM3N-EK board (see Figure 5-9 on page 5-7)
2. Make sure that VTG header is open on the QT600 (see “Target Voltage VTG” on page 5-8)
3. Start AVR QTouch Studio
4. Plug in the USB cable to the QT600. AVR QTouch Studio should now automatically connect to the SAM3N-EK
5. Press the Start Debug button

You should now be able to view the touch data signals and the state of each sensor.

*Figure 5-5.* QTouch Studio GUI

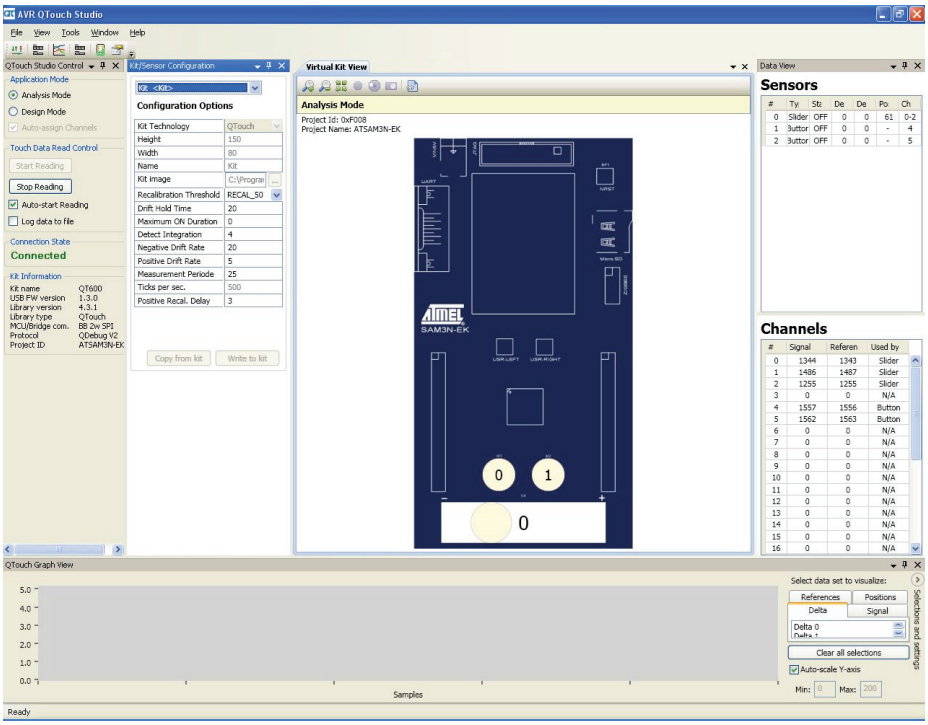


## 5.5 Hardware Description

### 5.5.1 QT600 Interface Board

*Figure 5-6.* QT600 Interface Board

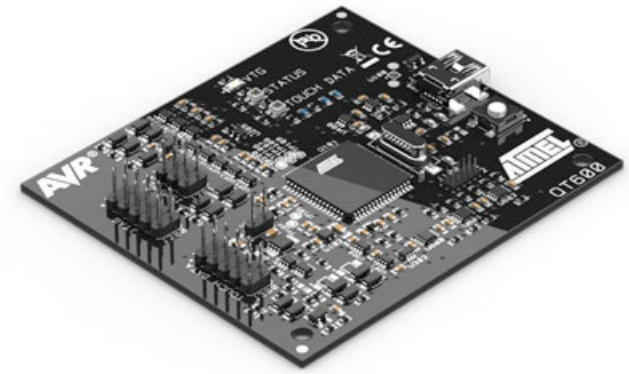


The QT600 Interface Board is the communication interface between the touch system (presently SAM3N-EK) and the AVR QTouch Studio. It receives touch signal data from the MCU running the QTouch Library, and forwards this data to the AVR QTouch Studio for visual presentation.

The QT600 can also be used as a programmer for programming the on-chip flash memory of the micro-controllers on the SAM3N-EK board.

***Figure 5-7.*** QT600 Interface Board Block Diagram

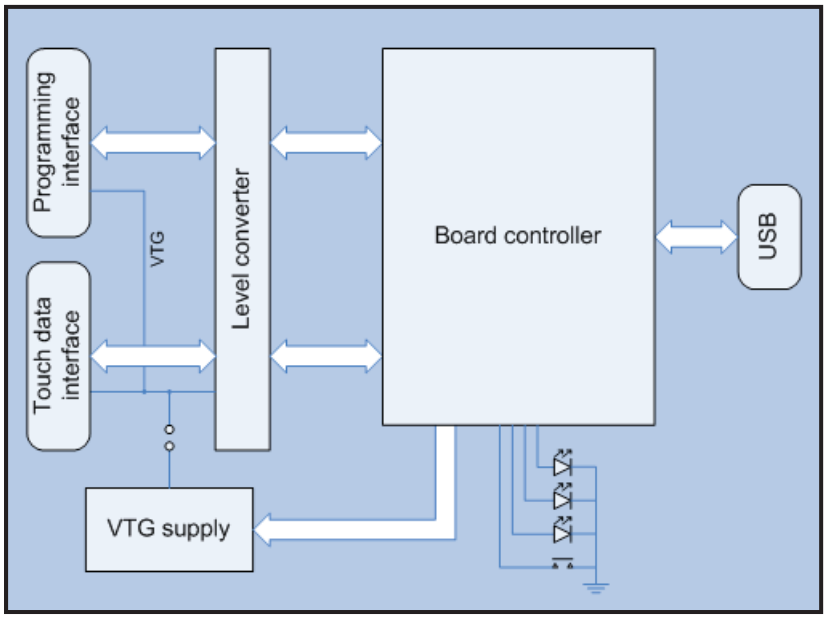

### 5.5.2 TOUCH DATA Connectors

***Figure 5-8.*** TOUCH DATA Connector Pinout

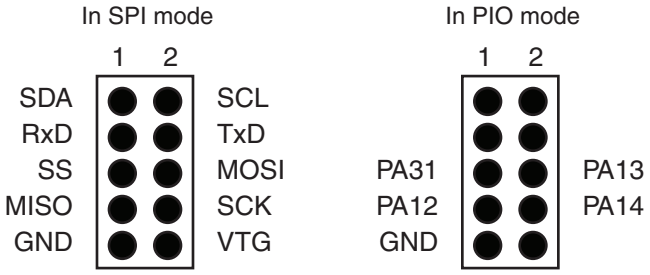


The TOUCH DATA connector located on the QT600 interface board is used for streaming touch data to the PC using the SPI (or PIO) interface. The corresponding connector is located on the Touch SAM3N-EK board. A straight 10-wire cable can be connected between these two connectors.

***Table 5-1.*** TOUCH DATA Connector Pinout

| Pin | Interface | Name | Direction, QT600 interface board | Direction SAM3N-EK | Remarks |
|---|---|---|---|---|---|
| 1 | TWI | SDA | Bi-directional | Bi-directional | Not used |
| 2 | | SCL | Bi-directional | Bi-directional | |
| 3 | UART | RxD | Output | Input | Not used |
| 4 | | TxD | Input | Output | |
| 5 | SPI | SS | Input | Output | |
| 6 | | MOSI | Input | Output | |
| 7 | | MISO | Output | Input | |
| 8 | | SCK | Input | Output | |
| 9 | ALL | GND | | | |
| 10 | ALL | VTG | | | Keep Jumper Open |

***Figure 5-9.*** TOUCH DATA Connector

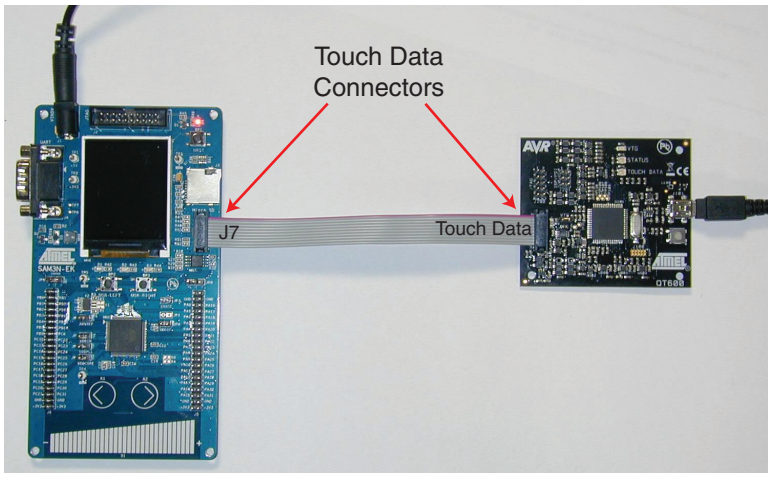

### 5.5.3 Target Voltage VTG

The VTG is supplied by the MCU board through the 10-wire cable (connected to the TOUCH DATA Connector).

***Figure 5-10.*** VTG

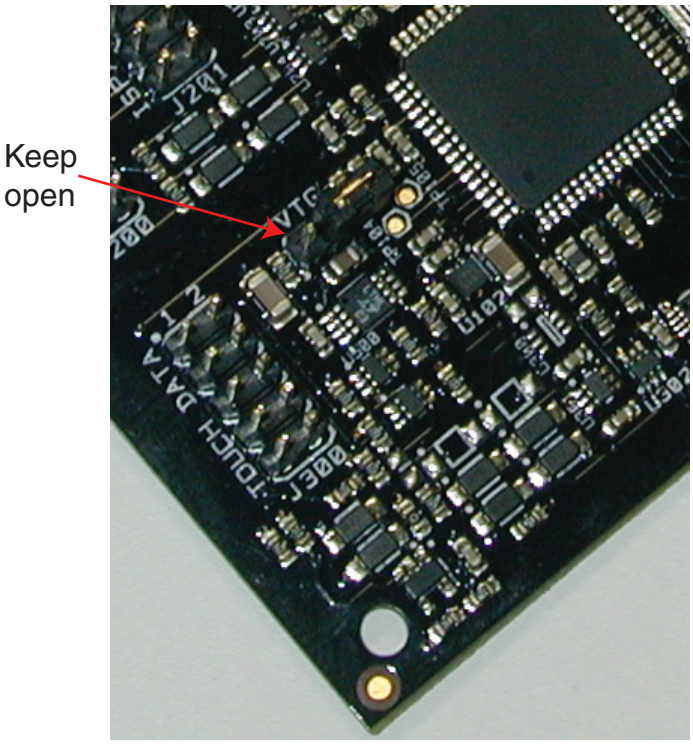


### 5.5.4 VTG LED

A green LED labeled VTG on the QT600 board is lit when a voltage of 0.9V or higher is available on the VTG net.

### 5.5.5 TOUCH DATA LED

The status of the LED indicates the operating mode of the QT600.

#### 5.5.5.1 Touch Streaming Mode

When the QT600 is in Touch streaming mode (for use with AVR QTouch Studio), the TOUCH DATA LED is green. When touch data is received from the SAM3N-EK, the LED starts to flash.

#### 5.5.5.2 Programming Mode

When the QT600 is in programming mode (for use with AVR Qtouch Studio), the TOUCH DATA LED is not lit.

### 5.5.6 STATUS LED

- Green: Ready state
- Orange: Busy programming
- Orange/red flashing: Upgrade mode
- Orange/green flashing: Upgrade mode, upgrade in progress

During programming, the LED is orange. When the Atmel target device has been successfully programmed, the LED turns green.

### 5.5.7 Touch ATx Firmware

The firmware for the Touch ATx is based on the QTouch Library. The QTouch Library handles the touch acquisition. The touch measurement values are made available for the application firmware trough an API, which is described in detail in the QTouch Library User Guide.

The touch measurement values available through the Touch Library API are sent to the QT600 with an SPI (or PIO) interface, using a custom protocol. AVR QTouch Studio will read these data packets from the QT600.

See the QT600 Protocol Document for details about the communication protocol.

## 5.6 Touch Debug

Before a touch debug session can be started, the target microcontroller on the SAM3N-EK board must be programmed. The example projects can be retrieved from the QTouch Library (installation steps are detailed in Section 5.4).

Example projects for both GCC and IAR compilers are available.

1. Connect a 10-wire cable between the Touch Data Connector on the SAM3N-EK board and the Touch Data connector on the QT600 Interface board (see Figure 5-9 on page 5-7)
2. Start AVR QTouch Studio
3. Connect the USB cable to the QT600 interface board
4. Press the Start Debug Button in AVR QTouch Studio

AVR QTouch Studio automatically connects to the QT600 when the USB plug is inserted. The Touch Data streaming starts when the "Start Debug" button is pressed.

## 5.7 Using QT600 and AVR QTouch Studio for Custom Applications

The QT600 Interface Board and QTouch Studio can be used to read touch data from any application based on the QTouch Library. The only requirement is that there are two I/O pins available and that there is enough free space in flash for the debug protocol and serial interface driver.

The QT600 interface uses an SPI protocol at a frequency of 200 kHz.

Complete firmware driver files are available in the QT600 example projects, which can be downloaded from www.atmel.com/QT600. See the readme.txt file in the QT600 Example Projects folder for instructions on how to add the QT600 protocol files to your firmware project.

## 5.8 Troubleshooting and Support

### 5.8.1 Technical Support

For technical support, contact at91@atmel.com. When requesting technical support for the QT600, you should provide the following information:

- PC processor type and speed
- PC operating system and version
- Atmel target device used (complete part number)
- Target voltage
- Jumper settings
- A detailed description of the problem

### 5.8.2 Force Firmware Upgrade

Before starting the procedure, make sure that the latest AVR Studio release (4.0 or later) has been installed on your PC.

1. If connected to the PC with a USB cable, unplug the QT600.
2. Press and hold the button on QT600 when connecting the USB cable: the status LED flashes red and orange, indicating the upgrade mode.
3. In AVR Studio, go to the Tools menu and select QT600 Upgrade.
4. The Atmel QT600 Upgrade program starts. If a connection has been established, the Status shows "QT600 present".
5. Press the Start Upgrade button: the upgrade program upgrades QT600's firmware.
6. When complete, a message box indicates if the upgrade was successful or not. Disconnect and then reconnect the USB cable.
7. If the upgrade was successful, the status LED turns green. Try to connect to the starter kit with QTouch Studio.

The QT600 USB Bridge firmware must be updated using the batch file available in “C:\...\QT600_USB_Bridge_Update” folder before using the Example projects.

***Figure 5-11.*** USB Connector

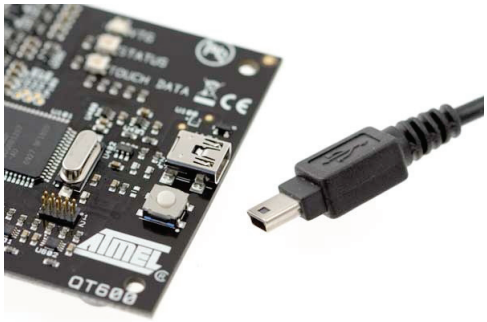

# Section 6

# Schematics

## 6.1 Schematics

This section contains the following schematics:

- Block Diagram
- Reference Guide
- Microcontroller, Power
- DataFlash, Micro SD, LCD, BL Driver, JTAG, RS232
- IO Expansion, Buzzer, ZigBEE, LEDs, Buttons, QTouch

# SAM3N-EK RevA Block Diagram

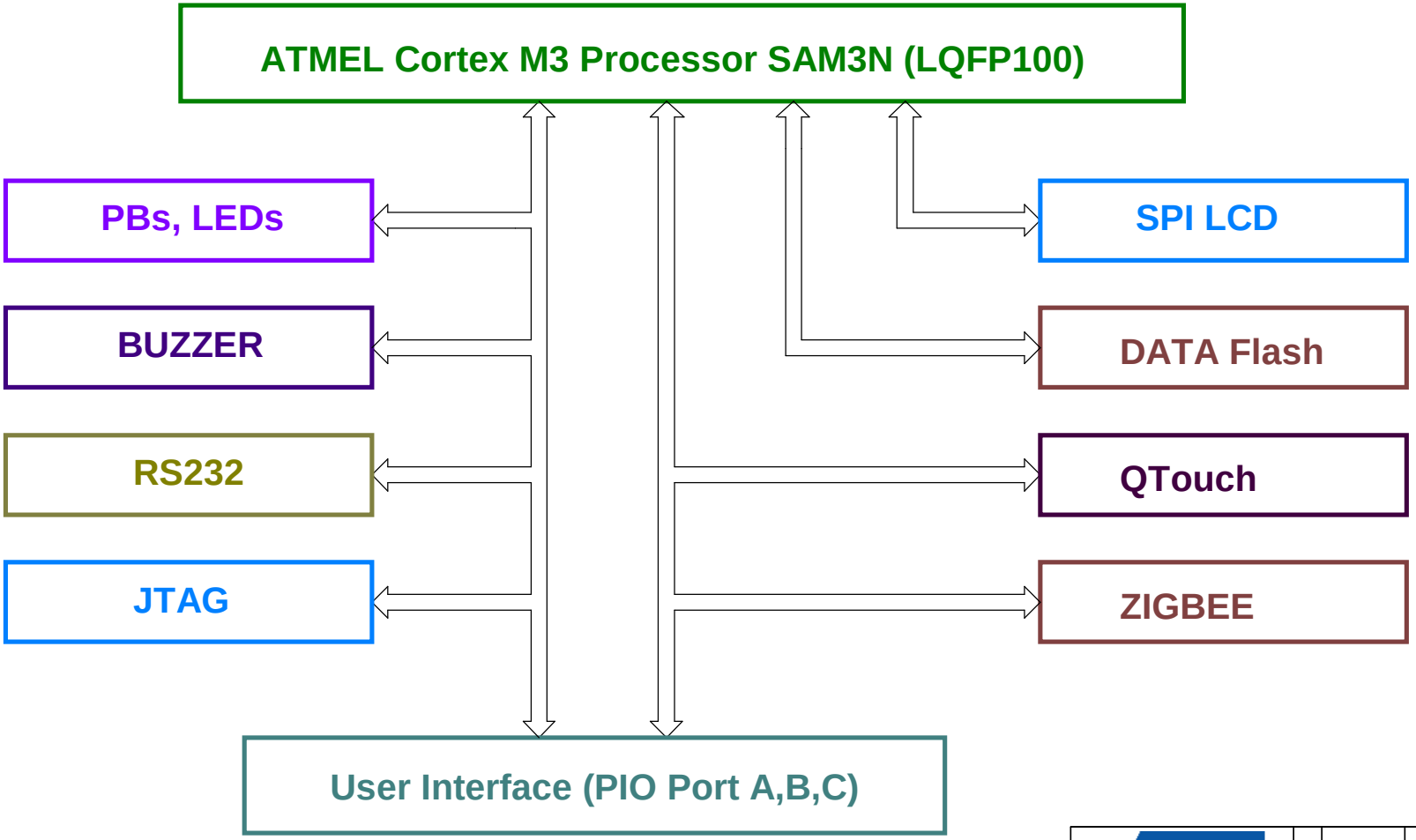


| REV | MODIF. | DES. | DATE | VER. | DATE |
|---|---|---|---|---|---|
| B | | NL | 05-MAY-10 | | |
| A | INIT EDIT | NL | 05-MAR-10 | XXX | XX-XXX-XX |

ATMEL ROUSSET

SAM3N-EK

Block Diagram

SCALE 1/1

REV. B

SHEET 1/5

This agreement is our property. Reproduction and publication without our written authorization shall expose offender to legal proceedings.

# REVISION HISTORY

| REV | DATA | NOTE |
|---|---|---|
| A | 2010.03.04 | ORIGINAL RELEASED |

# SCHEMATICS CONVENTIONS

| |
|---|
| (1) Resistance Unit: "K" is "Kohm", "R" is "Ohm? |
| (2) "DNP" means the component is not populated by default |

# JUMPER and SOLDERDROP

| PAGE | REFERENCE | DEFAULT | FUNCTION |
|---|---|---|---|
| 3 | JP1 | DNP | Close to select JTAG boundary scan |
| | JP2 | 1-2 | Analog reference voltage selection between 3.3V and 3V, default 3.3V |
| | JP3 | OPEN | ERASE, Close to reinitialize the Flash contents and some of its NVM bits |
| | JP4 | CLOSE | Access for current measurement on VDDIO |
| | JP5 | CLOSE | Access for current measurement on VDDIN |
| | JP6 | CLOSE | Access for current measurement on VDDPLL |
| | JP7 | CLOSE | Access for current measurement on VDDCORE |
| 5 | JP8<br>JP9 | 1-2 | DC voltage selection between 3.3V and 5V on PIO expansion ports, default for 3.3V |

# TABLE OF CONTENTS


| PAGE | DESCRIPTION |
|---|---|
| 1 | Block Diagram |
| 2 | Reference guide |
| 3 | Microcontroller, Power |
| 4 | Data Flash, Micro SD, LCD, BL Driver, JTAG, RS232 |
| 5 | IO Expansion, Buzzer, ZigBEE, LEDs, Buttons, QTouch |


# TEST POINT

| PAGE | REFERENCE | FUNCTION |
|---|---|---|
| 3 | TP1<br>TP2<br>TP3, TP4, TP5 | +5V<br>+3V3<br>GND |
| 4 | TP6<br>TP7 | UTXD0<br>URXD0 |

# PIO MUXING

| PIOA | USAGE | PIOA | USAGE | PIOB | USAGE | PIOC | USAGE | PIOC | USAGE |
|---|---|---|---|---|---|---|---|---|---|
| PA0 | POWER LED | PA16 | PB_USER2 | PB0 | | PC0 | QT_SL_SNS | PC16 | |
| PA1 | CMD_SOUND | PA17 | | PB1 | | PC1 | QT_SL_SNSK | PC17 | |
| PA2 | | PA18 | | PB2 | | PC2 | QT_SM_SNS | PC18 | |
| PA3 | | PA19 | MicroSD_CD | PB3 | | PC3 | QT_SM_SNSK | PC19 | |
| PA4 | | PA20 | | PB4 | JTAG | PC4 | QT_SR_SNS | PC20 | |
| PA5 | | PA21 | | PB5 | JTAG | PC5 | QT_SR_SNSK | PC21 | |
| PA6 | | PA22 | NPCS_DATAFLASH | PB6 | JTAG | PC6 | | PC22 | |
| PA7 | XIN32 | PA23 | LED_BLUE | PB7 | JTAG | PC7 | | PC23 | ZB_RSTN |
| PA8 | XOUT32 / ADTRG | PA24 | | PB8 | XOUT_12M | PC8 | QT1_SNS | PC24 | ZB_IRQ0 |
| PA9 | RX_UART0 | PA25 | LED_AMBER | PB9 | XIN_12M | PC9 | QT1_SNSK | PC25 | ZB_IRQ1 |
| PA10 | TX_UART0 | PA26 | | PB10 | | PC10 | QT2_SNS | PC26 | ZB_SLPTR |
| PA11 | | PA27 | | PB11 | | PC11 | QT2_SNSK | PC27 | |
| PA12 | SPI_MISO | PA28 | RS_LCD | PB12 | ERASE | PC12 | | PC28 | |
| PA13 | SPI_MOSI | PA29 | RST_LCD | PB13 | | PC13 | EN_LCD | PC29 | |
| PA14 | SPI_SPCK | PA30 | NPCS_LCD | PB14 | LED_GREEN | PC14 | | PC30 | |
| PA15 | PB_USER1 | PA31 | NPCS_ZigBee | | | PC15 | | PC31 | |

# DEFAULT NO POPULATE PARTS

| PAGE | REFERENCE | FUNCTION |
|---|---|---|
| 3 | Y1, R1, R7<br>JP1<br>R6, R8<br>R4, R9 | External clock resource input<br>Option access for JTAGSEL<br>Isolation between 12MHz clock source and GPIO line<br>Isolation between 32KHz clock source and GPIO line |
| 5 | S1, K1, K2 | QTouch PADs, not real part |

| REV | MODIF. | DES. | DATE | VER. | DATE |
|---|---|---|---|---|---|
| B | | NL | 05-MAY-10 | | |
| A | INIT EDIT | NL | 05-MAR-10 | XXX | XX-XXX-XX |

SAM3N-EK

Describe

SCALE 1/1

REV. B

SHEET 2/5

This agreement is our property. Reproduction and publication without our written authorization shall expose offender to legal proceedings.

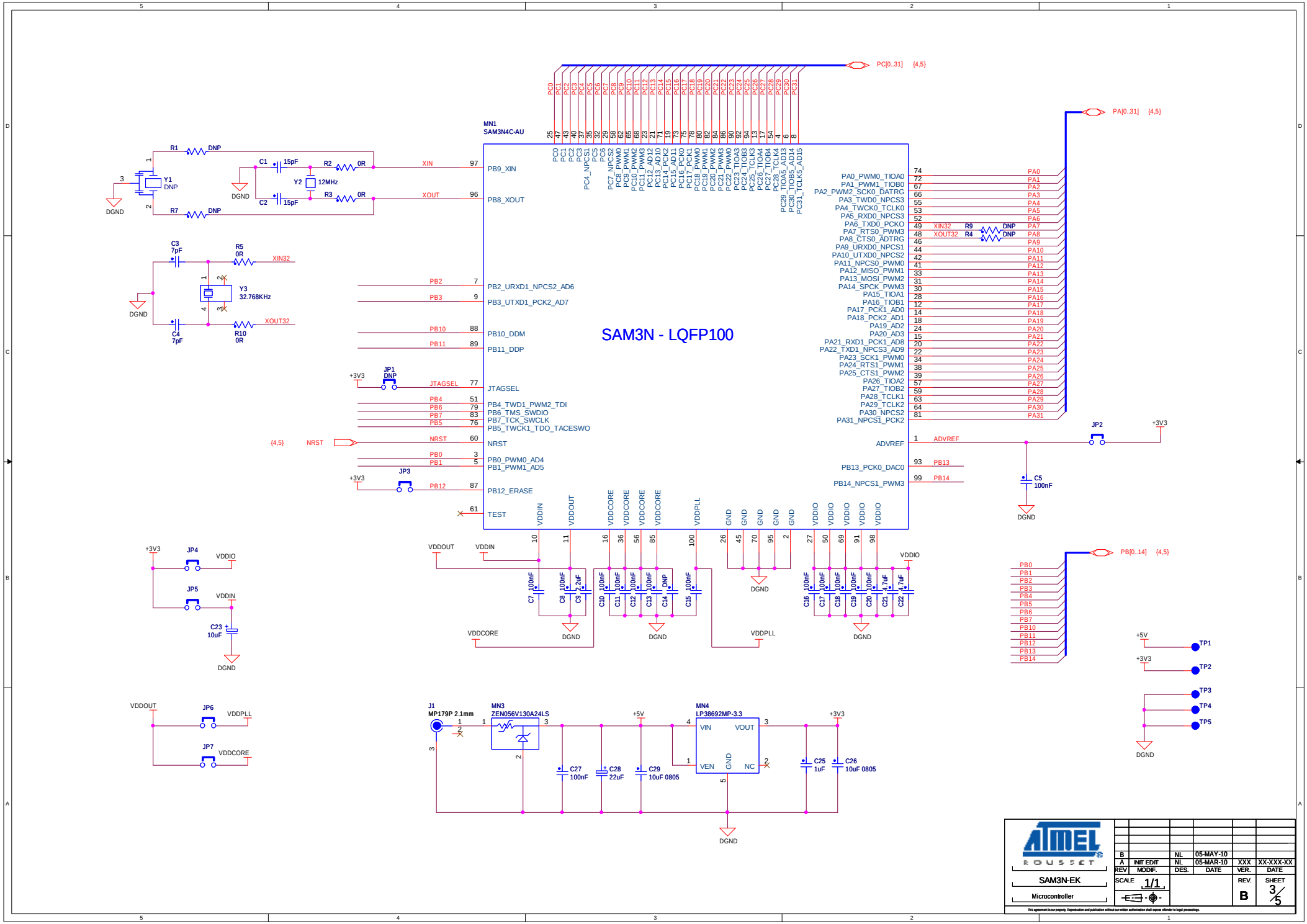
SAM3N - LQFP100
MN1
SAM3N4C-AU
PC[0..31] {4,5}
PA[0..31] {4,5}
PB[0..14] {4,5}
PB9_XIN
PB8_XOUT
PB2_URXD1_NPCS2_AD6
PB3_UTXD1_PCK2_AD7
PB10_DDM
PB11_DDP
JTAGSEL
PB4_TWD1_PWM2_TDI
PB6_TMS_SWDIO
PB7_TCK_SWCLK
PB5_TWCK1_TDO_TACESWO
NRST
PB0_PWM0_AD4
PB1_PWM1_AD5
PB12_ERASE
TEST
PA0_PWM0_TIOA0
PA1_PWM1_TIOB0
PA2_PWM2_SCK0_DATRG
PA3_TWD0_NPCS3
PA4_TWCK0_TCLK0
PA5_RXD0_NPCS3
PA6_TXD0_PCK0
PA7_RTS0_PWM3
PA8_CTS0_ADTRG
PA9_URXD0_NPCS1
PA10_UTXD0_NPCS2
PA11_NPCS0_PWM0
PA12_MISO_PWM1
PA13_MOSI_PWM2
PA14_SPCK_PWM3
PA15_TIOA1
PA16_TIOB1
PA17_PCK1_AD0
PA18_PCK2_AD1
PA19_AD2
PA20_AD3
PA21_RXD1_PCK1_AD8
PA22_TXD1_NPCS3_AD9
PA23_SCK1_PWM0
PA24_RTS1_PWM1
PA25_CTS1_PWM2
PA26_TIOA2
PA27_TIOB2
PA28_TCLK1
PA29_TCLK2
PA30_NPCS2
PA31_NPCS1_PCK2
ADVREF
PB13_PCK0_DAC0
PB14_NPCS1_PWM3
XIN
XOUT
XIN32
XOUT32
Y1
DNP
Y2
12MHz
Y3
32.768KHz
R1
R2
R3
R5
R7
R9
R10
C1
C2
C3
C4
C5
15pF
0R
7pF
100nF
DGND
+3V3
JP1
JP2
JP3
JP4
JP5
JP6
JP7
VDDIO
VDDIN
VDDOUT
VDDCORE
VDDPLL
C23
10uF
+5V
TP1
TP2
TP3
TP4
TP5
J1
MP179P 2.1mm
MN3
ZEN056V130A24LS
MN4
LP38692MP-3.3
VIN
VOUT
VEN
GND
NC
C27
100nF
C28
22uF
C29
10uF 0805
C25
1uF
C26
10uF 0805
ATMEL
ROUSSET
SAM3N-EK
Microcontroller
B
NL
05-MAY-10
A
INIT EDIT
NL
05-MAR-10
XXX
XX-XXX-XX
REV
MODIF.
DES.
DATE
VER.
DATE
SCALE
1/1
REV.
B
SHEET
3/5
This agreement is our property. Reproduction and publication without our written authorization shall expose offender to legal proceedings.

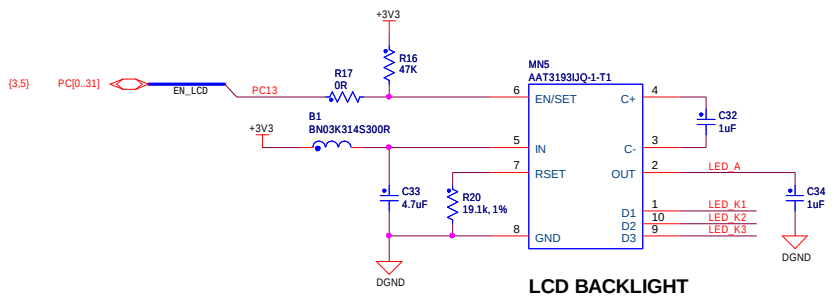


## LCD BACKLIGHT

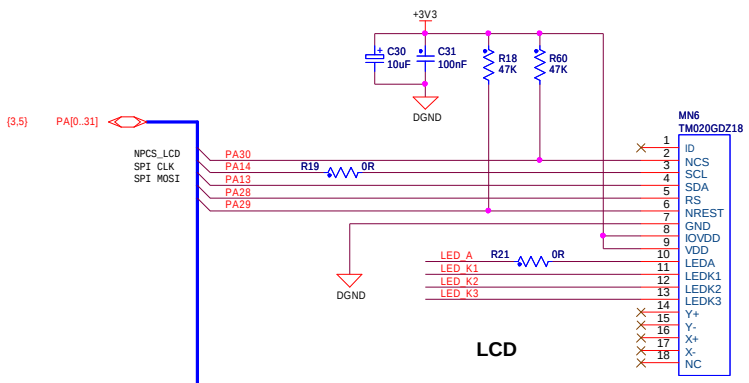


## LCD

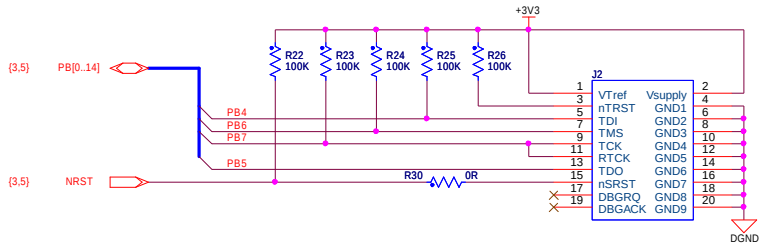


## ICE INTERFACE

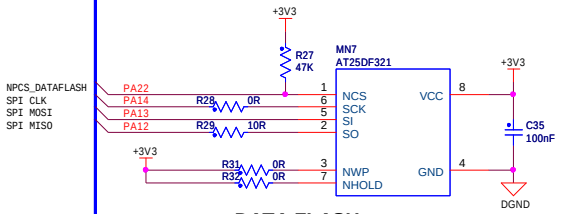


## DATA FLASH

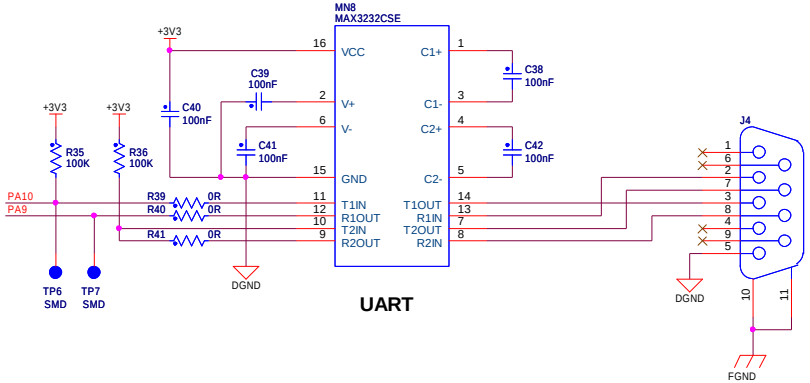


## UART

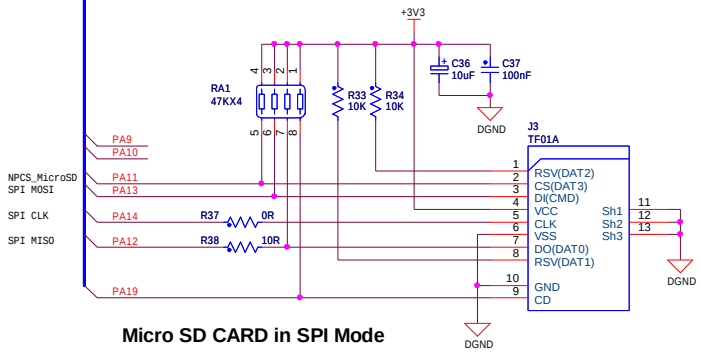


## Micro SD CARD in SPI Mode

| REV | MODIF. | DES. | DATE | VER. | DATE |
|---|---|---|---|---|---|
| B | | NL | 05-MAY-10 | | |
| A | INIT EDIT | NL | 05-MAR-10 | XXX | XX-XXX-XX |

SAM3N-EK

Peripheral_1

SCALE 1/1

REV. B

SHEET 4/5

This agreement is our property. Reproduction and publication without our written authorization shall expose offender to legal proceedings.

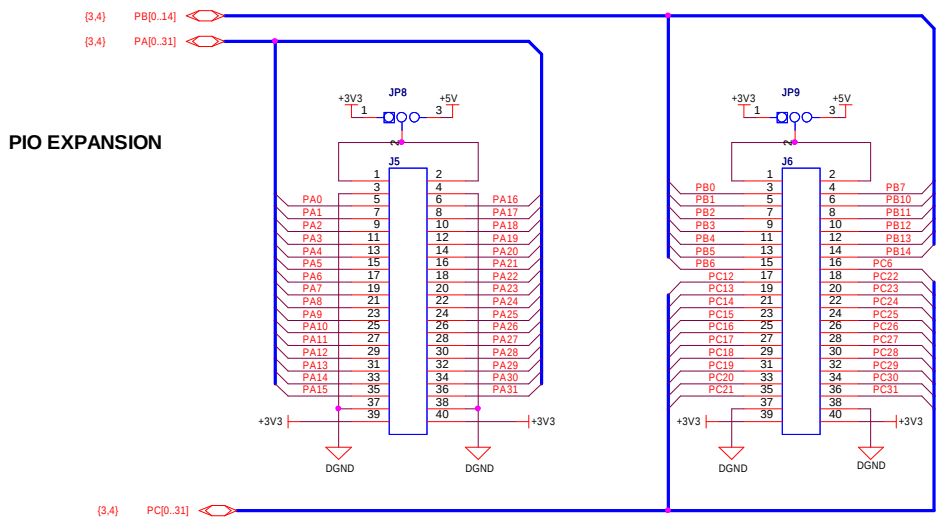


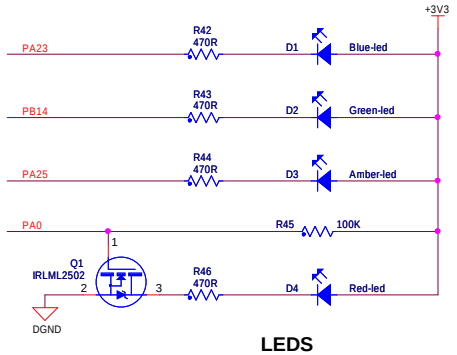


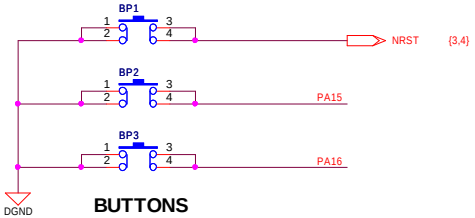


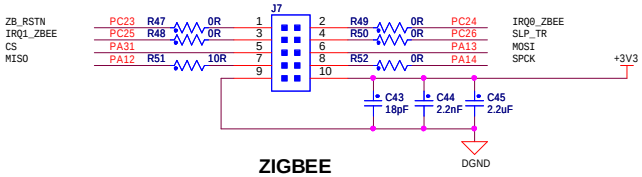


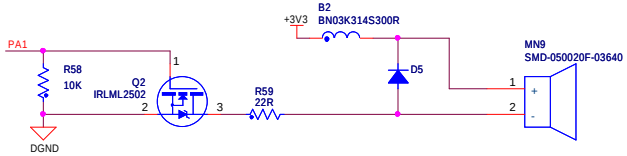


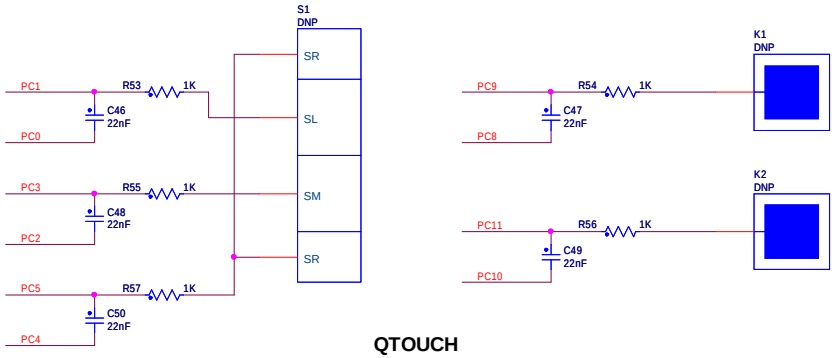


| REV | MODIF. | DES. | DATE | VER. | DATE |
|---|---|---|---|---|---|
| B | | NL | 05-MAY-10 | | |
| A | INIT EDIT | NL | 05-MAR-10 | XXX | XX-XXX-XX |

SAM3N-EK

Peripheral_2

SCALE 1/1

REV. B

SHEET 5/5

This agreement is our property. Reproduction and publication without our written authorization shall expose offender to legal proceedings.

# Section 7

# Troubleshooting

## 7.1 Self-Test

A test package software is available to implement a functional test for each section of the board. Refer to the SAM3N-EK page on http://www.atmel.com/dyn/products/tools_card.asp?tool_id=4846.

## 7.2 Board Recovery

The CDROM provided in the kit contains a recovery procedure allowing to reprogram the board as it was when shipped. An HTML page describing that procedure is located in the directory html of the CDROM. Just open the file demo_recovery.html you will find in there.

# Section 8

# Revision History

## 8.1 Revision History

*Table 8-1.*

| Document | Comments | Change Request Ref. |
|---|---|---|
| 11080C | Note 2 added to Section 4.3.9 ”JTAG/ICE”. | 7636 |
| 11080B | Section 5 “QT600” added. | 7544 |
| 11080A | First issue. | |

## Headquarters

***Atmel Corporation***
2325 Orchard Parkway
San Jose, CA 95131
USA
Tel: (+1) (408) 441-0311
Fax: (+1) (408) 487-2600

## International

***Atmel Asia Limited***
Unit 01-5 & 16, 19F
BEA Tower, Millennium City 5
418 Kwun Tong Road
Kwun Tong, Kowloon
HONG KONG
Tel: (+852) 2245-6100
Fax: (+852) 2722-1369

***Atmel Munich GmbH***
Business Campus
Parkring 4
D-85748 Garching b. Munich
GERMANY
Tel: (+49) 89-31970-0
Fax: (+49) 89-3194621

***Atmel Japan***
9F, Tonetsu Shinkawa Bldg.
1-24-8 Shinkawa
Chuo-ku, Tokyo 104-0033
JAPAN
Tel: (81) 3-3523-3551
Fax: (81) 3-3523-7581

## Product Contact

***Web Site***
www.atmel.com
www.atmel.com/AT91SAM

***Technical Support***
AT91SAM Support
Atmel technical support

***Sales Contacts***
www.atmel.com/contacts/

***Literature Requests***
www.atmel.com/literature



**Disclaimer:** The information in this document is provided in connection with Atmel products. No license, express or implied, by estoppel or otherwise, to any intellectual property right is granted by this document or in connection with the sale of Atmel products. **EXCEPT AS SET FORTH IN ATMEL'S TERMS AND CONDITIONS OF SALE LOCATED ON ATMEL'S WEB SITE, ATMEL ASSUMES NO LIABILITY WHATSOEVER AND DISCLAIMS ANY EXPRESS, IMPLIED OR STATUTORY WARRANTY RELATING TO ITS PRODUCTS INCLUDING, BUT NOT LIMITED TO, THE IMPLIED WARRANTY OF MERCHANTABILITY, FITNESS FOR A PARTICULAR PURPOSE, OR NON-INFRINGEMENT. IN NO EVENT SHALL ATMEL BE LIABLE FOR ANY DIRECT, INDIRECT, CONSEQUENTIAL, PUNITIVE, SPECIAL OR INCIDENTAL DAMAGES (INCLUDING, WITHOUT LIMITATION, DAMAGES FOR LOSS OF PROFITS, BUSINESS INTERRUPTION, OR LOSS OF INFORMATION) ARISING OUT OF THE USE OR INABILITY TO USE THIS DOCUMENT, EVEN IF ATMEL HAS BEEN ADVISED OF THE POSSIBILITY OF SUCH DAMAGES.** Atmel makes no representations or warranties with respect to the accuracy or completeness of the contents of this document and reserves the right to make changes to specifications and product descriptions at any time without notice. Atmel does not make any commitment to update the information contained herein. Unless specifically provided otherwise, Atmel products are not suitable for, and shall not be used in, automotive applications. Atmel's products are not intended, authorized, or warranted for use as components in applications intended to support or sustain life.

**© 2011 Atmel Corporation**. **All rights reserved.** Atmel®, logo and combinations thereof DataFlash®, SAM-BA® and others are registered trademarks or trademarks of Atmel Corporation or its subsidiaries. ARM®, Thumb® and the ARMPowered logo® and others are registered trademarks or trademarks ARM Ltd. Windows® and others are registered trademarks or trademarks of Microsoft Corporation in the US and/or other countries. Other terms and product names may be trademarks of others.



11080C–ATARM–30-Mar-11